NATIVE TRAILS

SPECIFICATIONS

TRIP LEVER BATH WASTE & OVERFLOW

Bathtub

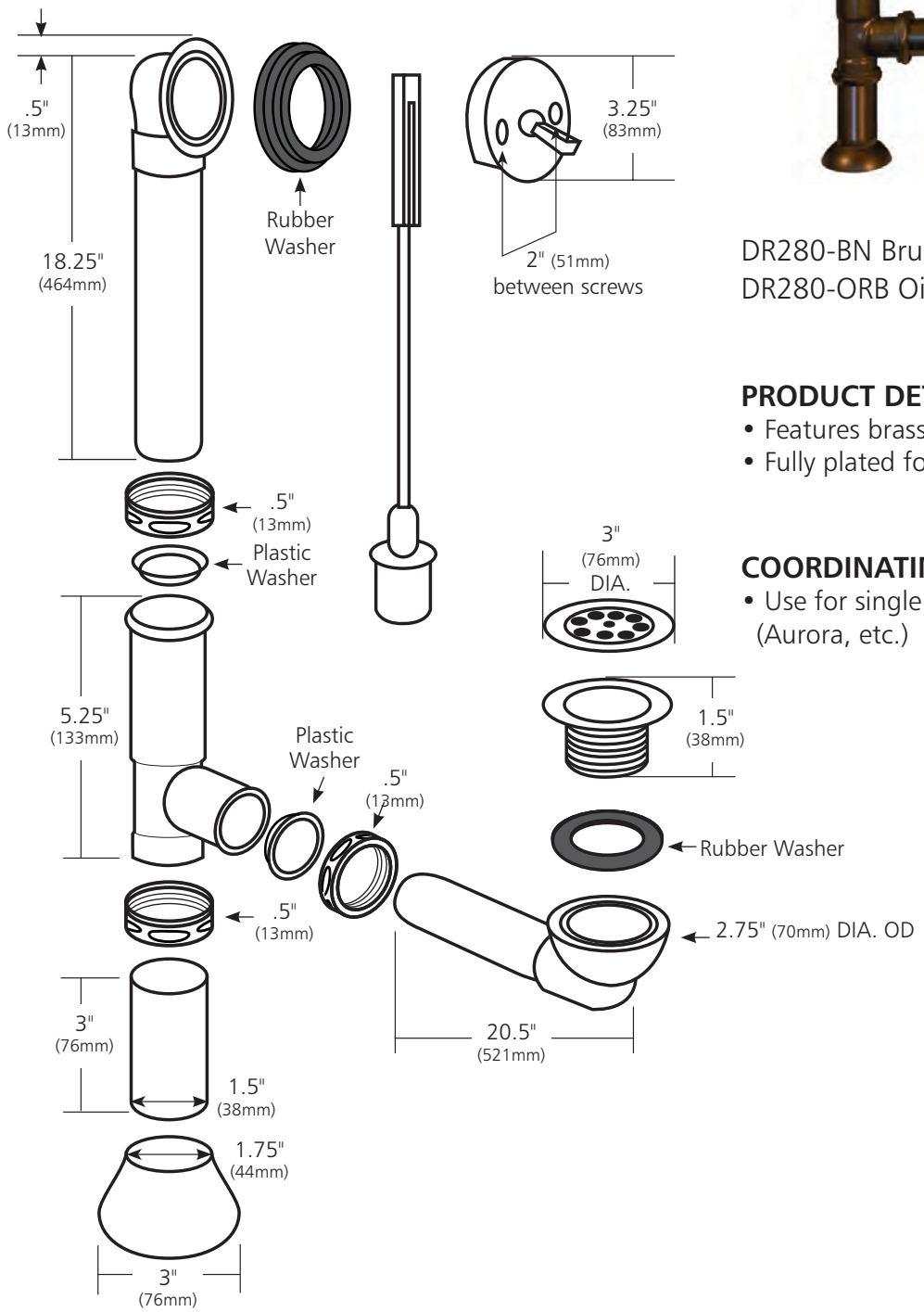

DR280-BN Brushed Nickel
DR280-ORB Oil Rubbed Bronze

PRODUCT DETAILS

- Features brass waste shoe with extended tube
- Fully plated for exposed plumbing

COORDINATING PRODUCTS

- Use for single walled tubs (Aurora, etc.)